ZUMTOBEL

AMP L 6400-840 PM WB MWCF

42929262

Moisture-proof diffuser luminaire

LED Moisture-proof diffuser luminaire with IP66 protection rating and drip-edge effect for minimising dirt and collection of dust for maximum hygienic requirements. Luminaire input power: 41.7 W, Luminaire with motion sensor and CorridorFUNCTION with LED converter; patented InvisiClick for clipless mounting and opening of the cover. Cover and basic diffuser made of impact-resistant polymethylmethacrylate, temperature- and UV-resistant, made as a single injection-moulded piece. LED service life lasts 100000 h before luminous flux is reduced to 95% of the initial value. Chromaticity tolerance (initial MacAdam): 3. Luminaire luminous flux: 6560 lm, Luminaire efficacy: 157 lm/W. Colour rendering Ra > 80, colour temperature 4000 K. Luminaire with symmetric wide light distribution (wide beam). Mounting via V2A standard spring clips to ceilings, walls or trunking. 5-pole connector terminal.. ambient temperature: -10°C to +35°C. Approved for indoor use with vertical or horizontal wall mounting (see installation instructions). Note: please contact your consultant if you are planning to use the luminaire in environments with chemical pollutants, high or condensing humidity and major variations in temperature. Complies with International Food Standard specifications. Designed for BESA box. Permissible for use in environments where the deposition of conductive dust on the luminaire can be expected (EN 60598-2-24). Protection class: SC1, 650 °C glow-wire tested, resistant against ammonia and cleaning agents in the food industry. Luminaire wired with halogen-free leads, silicone-free, Impact strength: IK03, Dimensions: 1600 x 92 x 90 mm; weight: 3.4 kg.

ZS_AMP_F_AMPHIBIA_WB.jpg

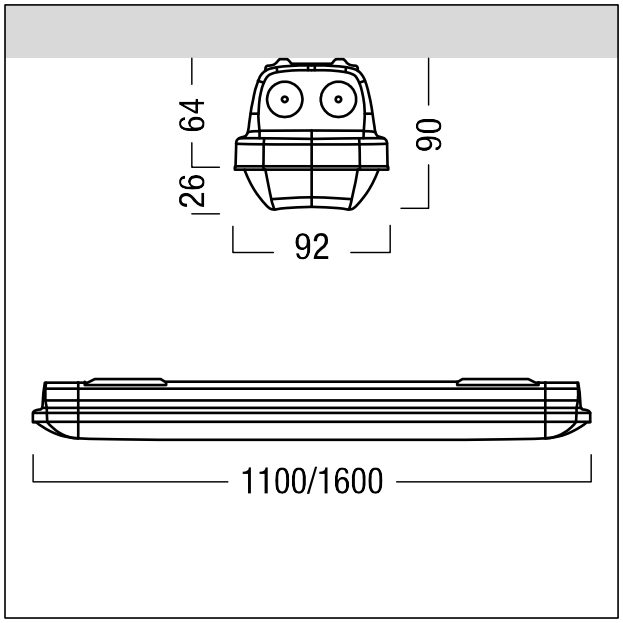

ZS_AMP_M_Amphibia.wmf

Light Distribution

STD - standard

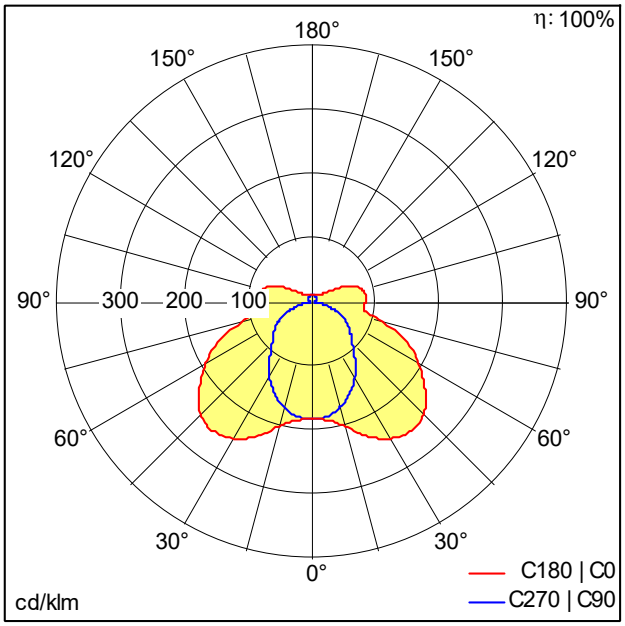

D45902_AMP_L_6400-840_PM_WB_LDO.ldt

- Light Source: LED
- Luminaire luminous flux*: 6560 lm
- Luminaire efficacy*: 157 lm/W
- Colour Rendering Index min.: 80
- Ballast: 1 x 28000655 LCA 50W 100-400mA one4all lp PRE
- Correlated colour temperature*: 4000 Kelvin
- Chromaticity tolerance (initial MacAdam): 3
- Rated median useful life*: L95 100000 h at 35 °C
- Luminaire input power*: 41.7 W Power factor = 0.94
- Standby Power*: 0.2 W
- Dimming: MWCF dimmable to 1%
- Maintenance category CIE 97: E - Dust-proof IP5X
- Total harmonic distortion (THD): 8.00 %

This product contains a light source of energy efficiency class C.

Please also consult the additional information on the next page

IP66 halogen IK03 650°C

We reserve the right to make technical changes without prior notice. 25.06.2025 © Zumtobel - 5-year guarantee in compliance with the terms of guarantee at www.zumtobel.com/guarantee

ZUMTOBEL

AMP L 6400-840 PM WB MWCF

42929262

Moisture-proof diffuser luminaire

All values marked with an * are rated values. Connected electrical load and luminous flux are subject to an initial tolerance of +/- 10%, the most similar colour temperature is subject to an initial tolerance of +/- 150K. Unless stated otherwise, the values apply to an ambient temperature of 25°C.
The level of luminous flux reduces over the life cycle due to technological reasons. The failure of up to 4 LED points causes no functional impairment and is therefore no reason for complaint.

We reserve the right to make technical changes without prior notice. 25.06.2025 © Zumtobel - 5-year guarantee in compliance with the terms of guarantee at www.zumtobel.com/guarantee